F4a

City of Hiawatha

Engineering Department

101 Emmons St., Hiawatha Iowa, 52233-1697
PHONE (319) 393-1515 ext. 511 FAX (319) 393-1516

To: **Mayor and City Council** **Date:** **April 12, 2018**

From: John C Bender PE, City Engineer

Re: **2018 Emmons Street Reconstruction**

Description: **Set Notice of Public Hearing and Notice to Bidders**

Report:

Hiawatha has contracted with Hall and Hall Engineers to prepare the plans and specifications for the 2018 Emmons Street Reconstruction Project. This includes removal and repaving of Emmons Street from last year's project to the railroad tracks, and between 9th Avenue and 10th Avenue. The plans are now nearly completed and we are ready to go out for construction bids. The notice of hearing and notice to bidders contains the following:

- The plans and specifications include approximately 900 feet of street removal and replacement
- Construction cost is estimated at approximately $600,000.00
- Project is budgeted with GO Bond and LOST funds
- The project schedule:
    - Set Public Hearing April 18, 2018
    - Public hearing, approve plans, specifications, contract, estimate of cost May 2, 2018
    - Take bids May 10, 2018
    - Council award contract and bond May 16, 2018
    - Early start date June 4, 2018
    - Complete phase I by late August, total project by October 2018

Engineering has reviewed the preliminary plans and specifications and recommends we move forward with the project calendar.

Any further questions please let me know.

DRAWINGS OF PROPOSED IMPROVEMENTS
FOR
2018 EMMONS STREET RECONSTRUCTION
IN THE CITY OF HIAWATHA, LINN COUNTY, IOWA

UTILITY AND EMERGENCY TELEPHONE NUMBERS

CITY OF HIAWATHA, IOWA

PUBLIC WORKS DEPARTMENT	(319)-393-1515
POLICE DEPARTMENT	(319)-393-1212
EMERGENCY	911
FIRE DEPARTMENT	(319)-393-4180
EMERGENCY	911
WATER DEPARTMENT	(319)-393-5556
SANITARY AND STORM SEWER DEPARTMENT	(319)-393-6601
CEDAR RAPIDS TRANSIT DEPARTMENT	(319)-286-5573
PARKS AND RECREATION	(319)-393-1515
IOWA ONE CALL (UTILITIES)	(800)-292-8989
MID-AMERICAN ENERGY	(319)-298-5162
CENTURY LINK (TELEPHONE)	
ENGINEER, WEST SIDE	(319)-399-7600
ENGINEER, EAST SIDE	(319)-399-7487
ALLIANT/I.E.S. INDUSTRIES (ELECTRIC, STEAM)	
INFORMATION	(319)-786-1908
MEDIACOM (CABLE TV)	
BUSINESS	(319)-395-9699 EXT 354
LOCATIONS	(800)-292-8989
WINDSTREAM (TELEPHONE / CABLE TV)	
BUSINESS	(319)-538-1985
LOCATIONS	(800)-292-8989
IMON (TELEPHONE / CABLE TV)	(319)-261-4640
SOUTHSLOPE (TELEPHONE / CABLE TV)	(319)-665-5312
IOWA NETWORK SERVICE	(319)-533-2319
ITC MIDWEST	(319)-297-6765
JOINT COMMUNICATIONS NETWORK	(319)-286-5491
LINN COUNTY REC	(319)-377-1587
CEDAR RAPIDS AND IOWA CITY RAILWAY COMPANY	(800)-283-1540
IOWA DEPARTMENT OF TRANSPORTATION	
DISTRICT ENGINEER	(319)-364-0235
MAINTENANCE GARAGES	(319)-364-8189
LINN COUNTY ENGINEER	(319)-892-6400
LINN COUNTY MAINTENANCE	(319)-892-6420

LOCATION MAP

(NOT TO SCALE)

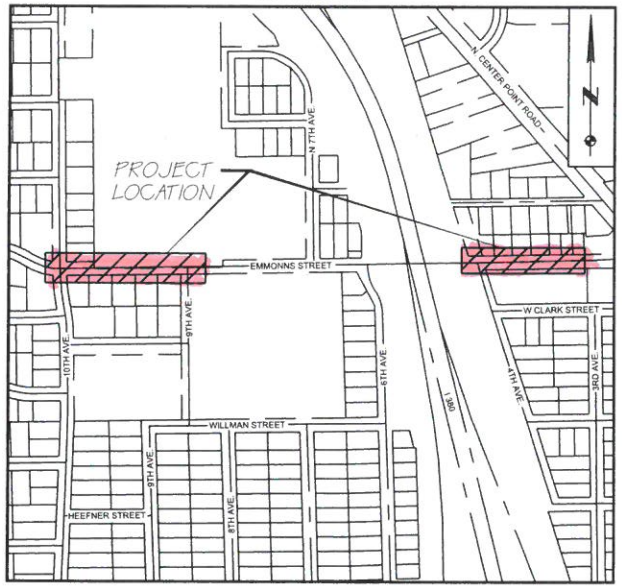

SHEET INDEX

NO.	DESCRIPTION
A1.0	COVER
A2.0	LEGEND
B1.0	TYPICAL CROSS SECTIONS
~~C1.0~~	~~GENERAL NOTES AND QUANTITIES~~
C2.0	GRADING AND EROSION CONTROL PLAN
C3.0	GRADING AND EROSION CONTROL PLAN
C4.0 & C4.1	DEMOLITION AND REMOVAL PLANS
C5.0 & C5.1	DEMOLITION AND REMOVAL PLANS
D1.0 & D1.1	PAVEMENT PLANS
D2.0 & D2.1	PAVEMENT PLANS
W1.0 - W1.3	CROSS SECTIONS
W2.0 - W2.2	CROSS SECTIONS

IOWA ONE CALL
CALL BEFORE YOU DIG!
1-800-292-8989
www.iowaonecall.com
811

MAYOR: BILL BENNETT
CITY CLERK: KELLY KORNEGOR
CITY ADMINISTRATOR: KIM DOWNS

COUNCIL PERSONS: AIME WICHTENDAHL
ROB ARCHIBALD
DENNY NORTON
DICK OLSON
STEVE DODSON

NOTE

THE PROPOSED IMPROVEMENTS INCLUDED IN THESE DRAWINGS HAVE BEEN DESIGNED IN ACCORDANCE WITH THE CEDAR RAPIDS METROPOLITAN AREA DESIGN STANDARDS MANUAL.

CITY OF HIAWATHA

THIS ENGINEERING DOCUMENT IS APPROVED FOR CONSTRUCTION

JOHN BENDER, CITY ENGINEER DATE

LICENSED PROFESSIONAL ENGINEER MATTHEW G. JOHNSON 17666 IOWA

I hereby certify that this engineering document was prepared by me or under my direct personal supervision and that I am a duly licensed Professional Engineer under the laws of the State of Iowa.

Signed: Date:

Matthew G. Johnson, P.E. 17666
My license renewal date is December 31, _____

Pages or sheets covered by this seal:

CONTACT PERSON:

MATT JOHNSON, P.E.
1860 BOYSON ROAD
HIAWATHA, IOWA 52233
PH: (319) 362-9548
FAX: (319) 362-7595

Hiawatha!

HALL & HALL ENGINEERS, INC.
Leaders in Land Development Since 1953
1860 BOYSON ROAD, HIAWATHA, IOWA 52233
PHONE: (319) 362-9548 FAX: (319) 362-7595
CIVIL ENGINEERING • LANDSCAPE ARCHITECTURE
LAND SURVEYING • LAND DEVELOPMENT PLANNING
www.halleng.com

DRAWINGS OF PROPOSED IMPROVEMENTS FOR 2018 EMMONS STREET RECONSTRUCTION
CAD File: I:\projects\4000\4089-18-1 Emmons St Reconstruction\DWG\PDI\A.01 COVER.dwg Date Plotted : Mar 26, 2018 - 4:28pm Plotted By : MJOHNSON

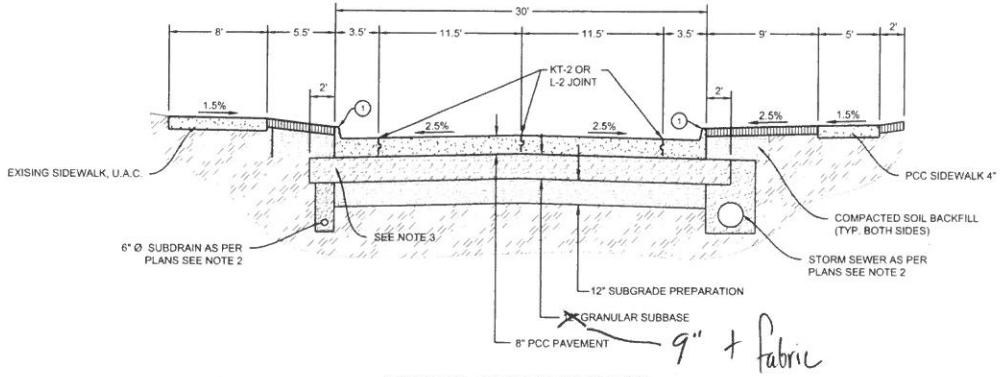

TYPICAL CROSS SECTION

EMMONS STREET
STA 1+92 TO STA 6+61

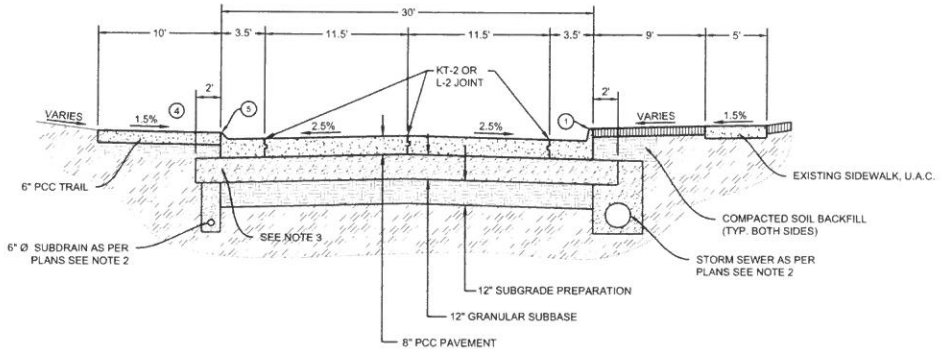

TYPICAL CROSS SECTION

EMMONS STREET
STA 100+80 TO STA 103+73

NOTES:

1. 6" HIGH INTEGRAL CURB, TYPE 1 PER STANDARD DETAIL 2700-010.
2. REFER TO PLANS FOR LOCATIONS OF SUBDRAINS AND/OR STORM SEWER LINES. WHERE PLANS SHOW THESE LINES UNDER PAVEMENT LONGITUDINALLY, SUBGRADE SHALL BE SHAPED TO DRAIN TO TRENCHES FOR THESE LINES. THIS WORK IS ALSO REQUIRED FOR LINES UNDER INTERSECTION RETURNS. DEPTH OF SUBBASE SHALL BE INCREASED AS REQUIRED FOR THIS WORK. SEE STANDARD DETAIL 2400-090 FOR SUBDRAIN INSTALLATION.
3. SUBBASE SHALL BE EXTENDED OVER STORM SEWER AND/OR SUBDRAIN TRENCHES WHERE REQUIRED TO MAINTAIN PROPER SUBBASE DRAINAGE. SUBBASE SHALL BE EXTENDED TO CENTERLINE OF STORM SEWER TRENCH AND COMPLETELY OVER SUBDRAIN TRENCH.
4. SEE DETAIL 2700-112 FOR TYPICAL GRADING BEHIND CURB. TYPICAL GRADING SHALL BE MODIFIED AS NEEDED TO MATCH PROPOSED AND/OR EXISTING SIDEWALK GRADES.
5. 3.25" HIGH LOW PROFILE CURB, PER STANDARD DETAIL 2700-010.

DRAWN BY: CLP				
CHECKED BY: SRW				
APPROVED BY: MGJ				
DATE: #####				
FIELD BOOK: ----	NO.	REVISION DESCRIPTION	APPROVED	DATE

Hiawatha!

HALL & HALL ENGINEERS, INC.
Leaders In Land Development Since 1953
1860 BOYSON ROAD, HIAWATHA, IOWA 52233
PHONE: (319) 362-8448 FAX: (319) 362-7595
CIVIL ENGINEERING • LANDSCAPE ARCHITECTURE
LAND SURVEYING • LAND DEVELOPMENT PLANNING
www.halleng.com

2018 EMMONS STREET RECONSTRUCTION
HIAWATHA, IOWA

TYPICAL SECTIONS

SCALE: NO SCALE
PROJECT NO: 4089-18-01

SHEET
B1.0

CAD File: I:\projects\4000\4089-18-1 Emmons St Reconstruction\DWG\PDI\B.01 TYPICAL SECTIONS.dwg Date Plotted : Mar 27, 2018 - 2:06pm Plotted By : CLP

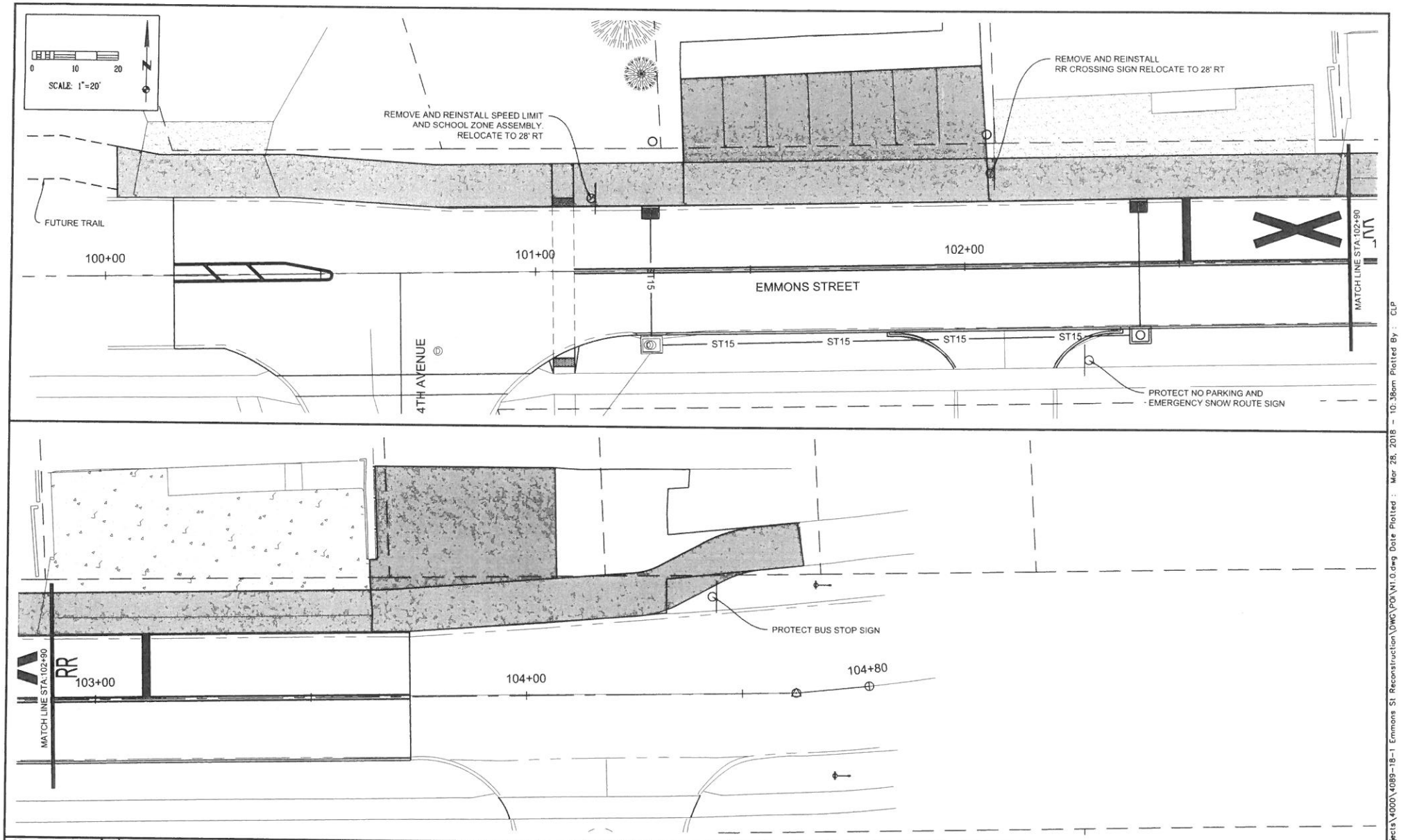

DRAWN BY: CLP				
CHECKED BY: SRW				
APPROVED BY: MGJ				
DATE: #####				
FIELD BOOK: ----	NO.	REVISION DESCRIPTION	APPROVED	DATE

Hiawatha!

HALL & HALL ENGINEERS, INC.
Leaders in Land Development Since 1953
1860 BOYSON ROAD, HIAWATHA, IOWA 52233
PHONE: (319) 362-9548 FAX: (319) 362-7585
CIVIL ENGINEERING • LANDSCAPE ARCHITECTURE
LAND SURVEYING • LAND DEVELOPMENT PLANNING
www.halleng.com

2018 EMMONS STREET RECONSTRUCTION
HIAWATHA, IOWA

PAVEMENT MARKING AND SIGNAGE PLANS

SCALE: 1"=20'

PROJECT NO: 4089-18-01

SHEET N2.0

CAD File: I:\projects\4000\4089-18-1 Emmons St Reconstruction\DWG\PDN\N1.0.dwg Date Plotted : Mar 28, 2018 - 10:38am Plotted By : CLP

DRAFT

RESOLUTION NO. 18-
City Council

RESOLUTION SETTING PUBLIC HEARING DATE FOR THE EMMONS STREET RECONSTRUCTION PROJECT

BE IT RESOLVED BY THE CITY COUNCIL OF THE CITY OF HIAWATHA, IOWA to direct the City Clerk to proceed with notification of a public hearing that will be held in the Hiawatha Council Chambers, 101 Emmons Street, before the Hiawatha City Council on Wednesday, May 2, 2018 at 5:30 P.M. to consider adoption and placing on file of plans, specifications, form of contract and estimate of cost for the 2018 Emmons Street Reconstruction Project, and further direct publication of notice to bidders.

AYES:
NAYS:
ABSENT:

PASSED AND APPROVED this 18th day of April, 2018.

_____
Bill Bennett, Mayor

ATTEST:

_____
Kelly Kornegor, City Clerk